©2019 JOHN POMP STUDIOS

JOHN POMP

RONDELLE SIDE TABLE

RONDELLE SIDE TABLE

MODEL NO: JPSRST-01

Hand-blown, clear glass crystal rondelle drawer face on metal frame with wood panels, leather lined shelf and wood drawer, metal hardware details with flame-cut metal top

AS SHOWN (IN PHOTO)

Metal - frame: oil rubbed blacked steel
top: antique brass
glass hardware: brass
Wood - ebonized ash
Leather - black

DIMENSIONS

Overall - 25”L x 18”W x 25”H

AVAILABLE FINISHES

Wood - white ash, oxidized walnut, medium walnut, or ebonized ash

Metal - frame: metal brushed steel, light oil rubbed blackened steel, or oil rubbed blackened steel,
top: satin nickel, antique brass, or oxidized brass

Leather - hand-stitched natural tan, bourbon brown, or black leather

Glass/handle hardware - silver or brass

ADDITIONAL NOTES

Lead time is 10-12 weeks.

Includes studio mark signature.

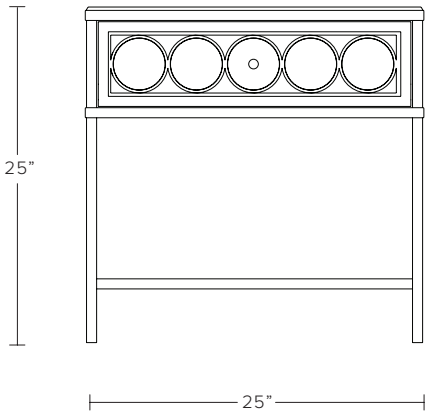

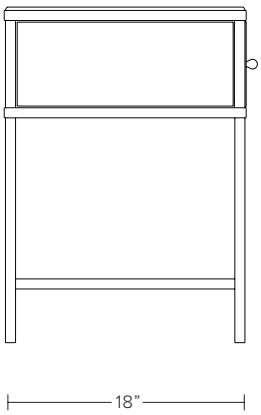

1630 N MASCHER ST PHILADELPHIA PA 19122 T 215 426 7667 F 215 426 2446 JOHNPOMP.COM